INDOOR / TRACKLIGHTS / MAGNETIC TRACK / DISC TRACKLIGHT DIAM 77X55MM

Item code 86.TL01.Q313.01

- Installation and wiring of luminaire must be in accordance with all applicable local codes.
- Installation, inspection, and maintenance of luminaires should be performed by a qualified electrician.
- DO NOT make or alter any open holes in the luminaire. Do not modify the luminaire.
- DO NOT install damaged product.
- Make sure electrical power is OFF before and during installation and maintenance.
- Make sure the equipment is properly grounded.
- Make sure the supply voltage is same as the rated fixture voltage.

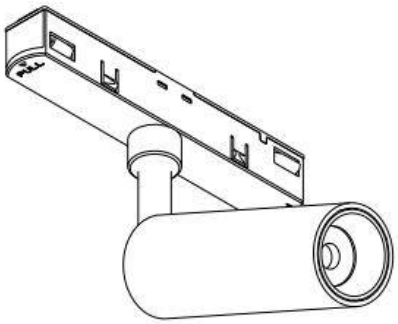

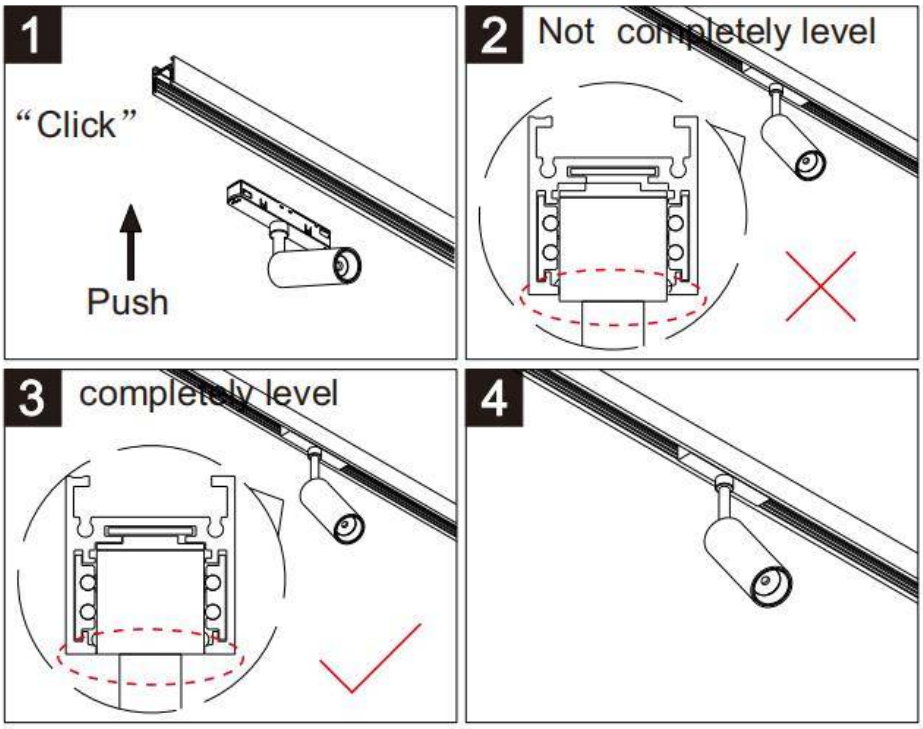

Note: The positive and negative (+, -) signal terminal of 0-10V dimming luminous must be installed corresponding to the input terminal.
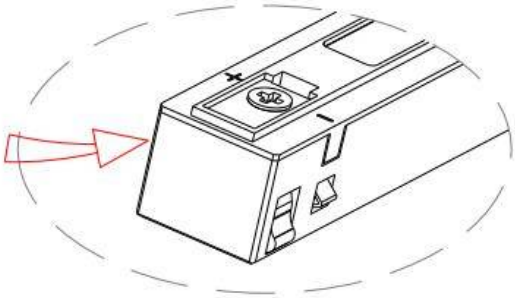
The positive and negative (+, -) signal terminal of DALI dimming luminous, the signal termial does not need to be installed corresponding to the input termial.